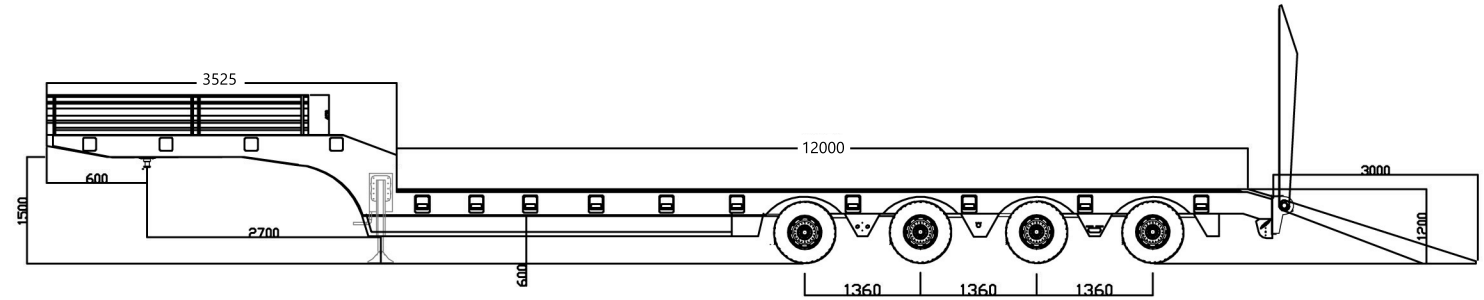


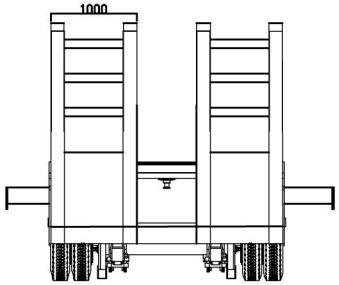


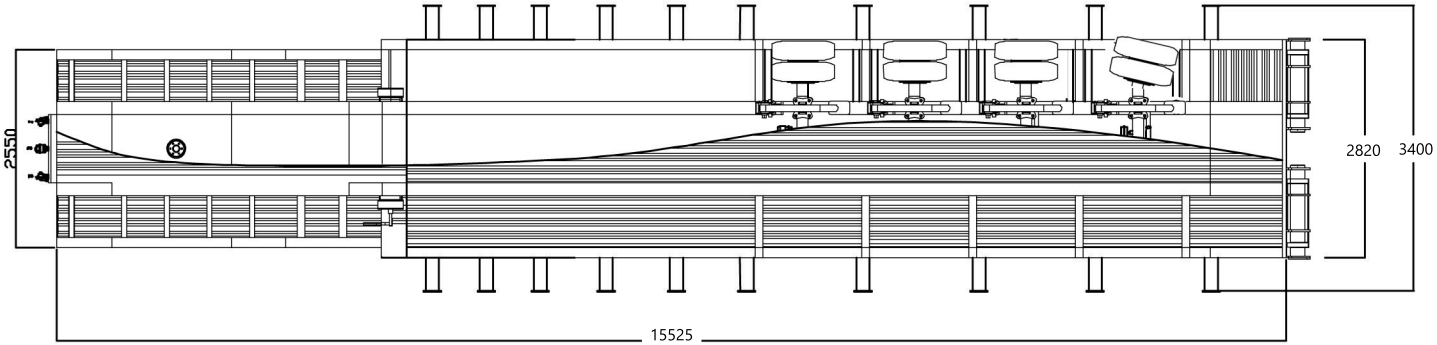


**NOT:Ölçü parametreleri ± % 2 toleransı ıdır**

| | NAME | SIGNATURE | DATE | | |
|---|---|---|---|---|---|
| DRAWN | Muharrem Akar | | | | DRAWNER |
| CHK'D | | | | | MECANICAL ENGINEER |
| APPV'D | | | | | MECANICAL ENGINEER |
| MFG | | | | | |
| Q.A | | | | MATERIAL: | |
| | | | | | |
| | | | | | |
| | | | | WEIGHT: | |

TITLE:

ALURA TRAILER
WWW.ALURATRAILER.COM

DWG NO.
4 AXLES LOWBED TRAILER

A4

SCALE:1:1

SHEET 1 OF 1